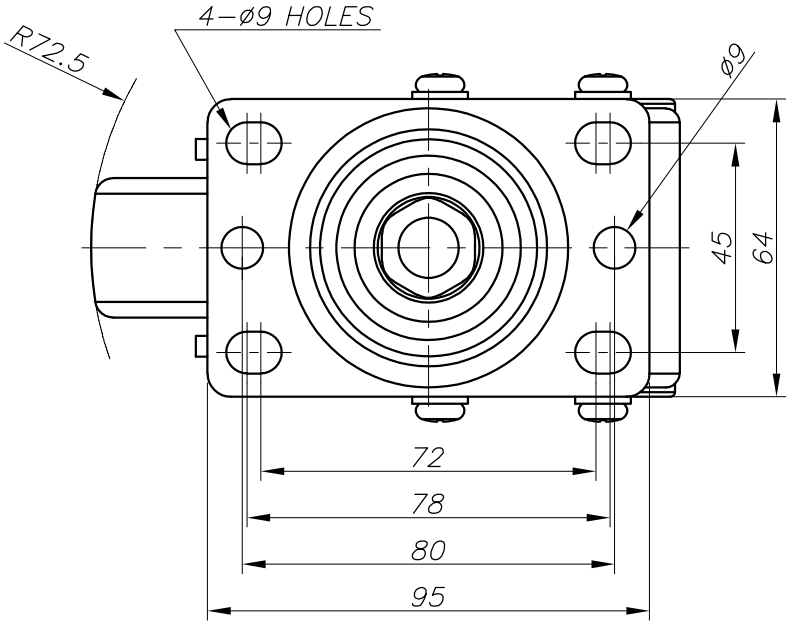

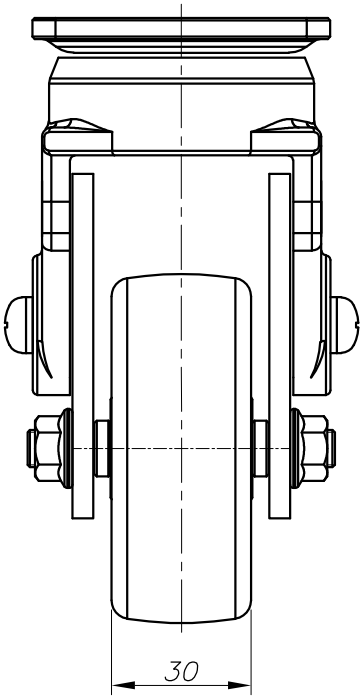

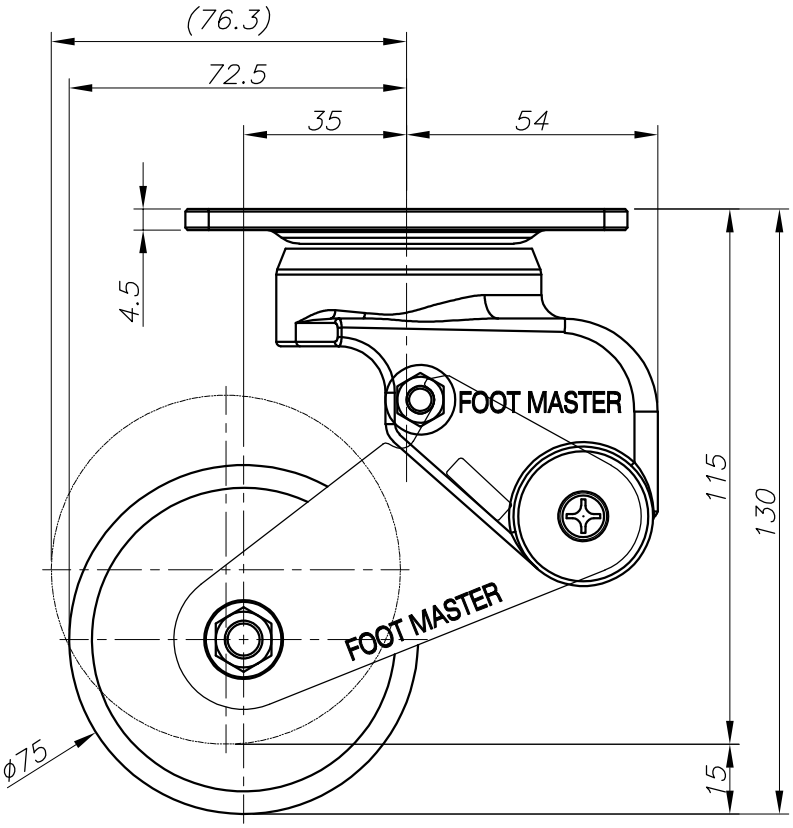

FOOT MASTER®	FOOMA®	G-DOK IND.	MODEL NAME	GDS-75-ASF, ARF-PUS

REV. NO.	DATE	DESCRIPTION	APP'D	REMARKS
1	–	–	–	–

0

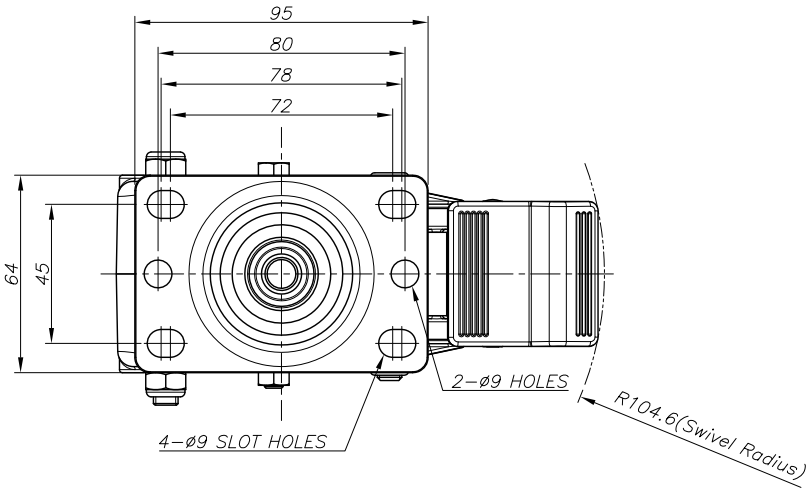

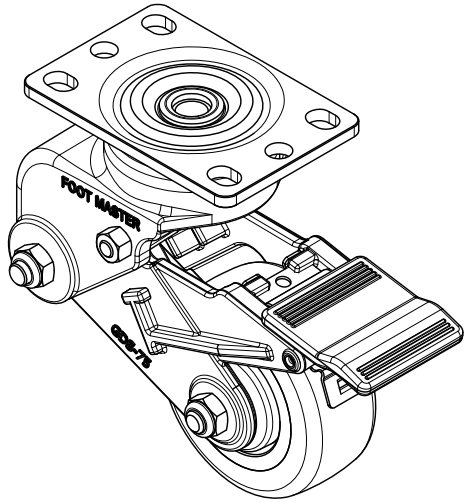

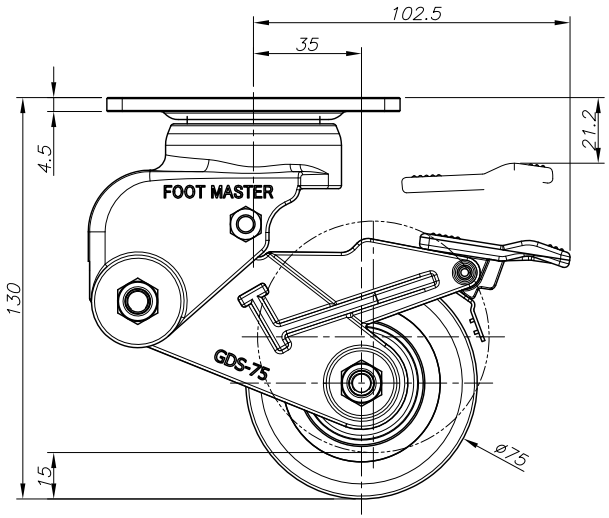

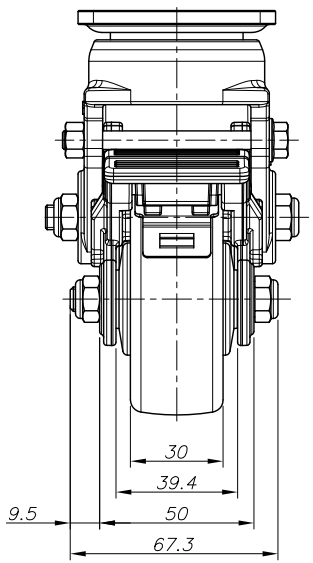

NOTE

No1) Load Capacity : 90kg/EA

No2) Surface Treatment : Powder Coated & Zinc Galvanized & Electroless Nickel Plated

PROCESS	--
MATERIAL	--

APPROVED BY	CHECKED BY	DRAWN BY
O.C.K	J.T.H	J.L.M

PRODUCT GENERAL TOLERANCE

CASTER HEIGHT		WHEEL OUTER DIAMETER		WHEEL HUB WIDTH	
PRECISION(P)	GENERAL(G)	PRECISION(P)	GENERAL(G)	PRECISION(P)	GENERAL(G)
±0.5% (MIN:±0.5mm)	±1% (MIN:±1mm)	±0.5% (MIN:±0.5mm)	±1% (MIN:±1mm)	-1% (MIN:-0.5mm)	-2% (MIN:-1mm)

GENERAL TOLERANCE

	CHAMFER	0.5	ROUND	0.5	UNIT	mm

	MACHINING, WORKING			DIE CASTING(3)		INJECTION MOLDING			PRESS WORKING				
	RANGE	PRECISION (1)	GENERAL (2)	RANGE	Hole to hole pitch error	Hole to edge pitch error	RANGE	PRECISION (1)	GENERAL (2)	RANGE	t	1	2	3
	0.5 ~ 6	±0.05	±0.1	1~3	±0.3	±0.1	1~3	±0.1	±0.3	1~3	±0.1	±0.2	±0.5	±1
	6 ~ 30	±0.1	±0.2	3~6	±0.1	±0.5	3~6	±0.2	±0.5	3~10	±0.15	±0.2	±0.8	±1.5
	30 ~ 120	±0.15	±0.3	6~10	±0.3	±0.4	6~10	±0.4	±0.6	10~40	±0.2	±0.5	±1.2	±2.5
	120 ~ 400	±0.2	±0.5	10~120	±0.6	±0.7	10~120	±0.5	±0.8	40~400	±0.3	±0.8	±2.0	±4.0
	400 ~ 1000	±0.3	±0.8	120~320	±0.5	±0.8	120~320	±0.8	±1.0	400~1000	±0.5	±1.2	±3.0	±6.0

NO.	DESCRIPTION	UNIT	Q'TY	MATERIAL	WEIGHT	SPECIFICATION	REMARKS
-	-	-	-	-	-	-	-

FOOT MASTER® FOOMA® G-DOK IND.

SERIES NAME	GDS-SERIES	DATE	2026.08.12	GSN NO.	-
PRODUCT NAME	GDS-75-BSF-LUD-PUS / GDS-75-BRF-LUD-PUS	SCALE	N/S	DWG. NO.	-
PART NAME	ASSEMBLY	WEIGHT	--	REVISION	0
		GENERAL TOLERANCE	B	SIZE	A3
				ANGLE	

FOOT MASTER G-DOK IND.

VERSION:20230808