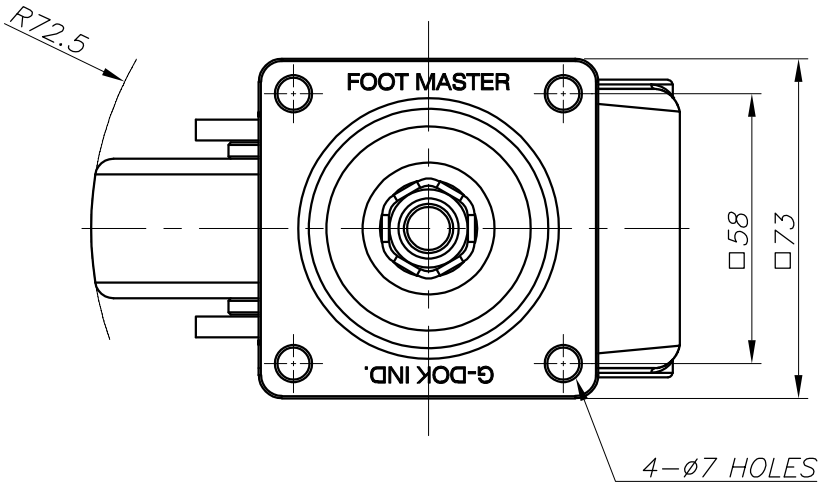

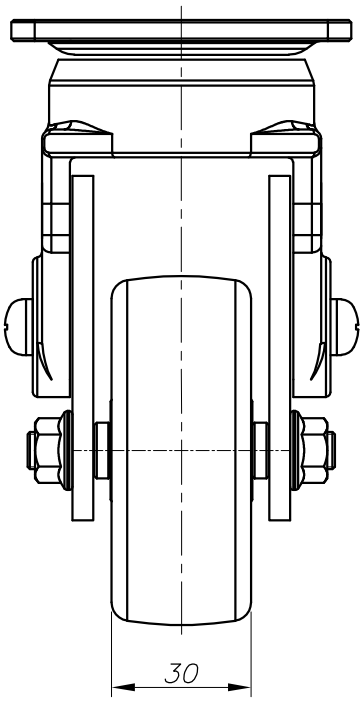

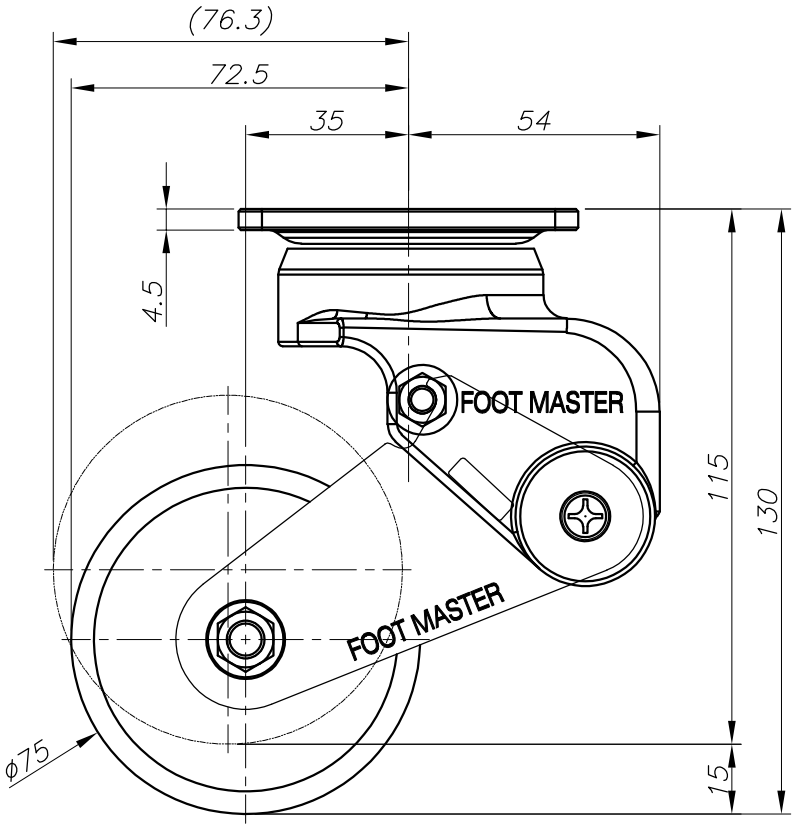

FOOT MASTER®	FOOMA®	G-DOK IND.	MODEL NAME	GDS-75-ASF, ARF

REV. NO.	DATE	DESCRIPTION	APP'D	REMARKS
1	–	–	–	–

0

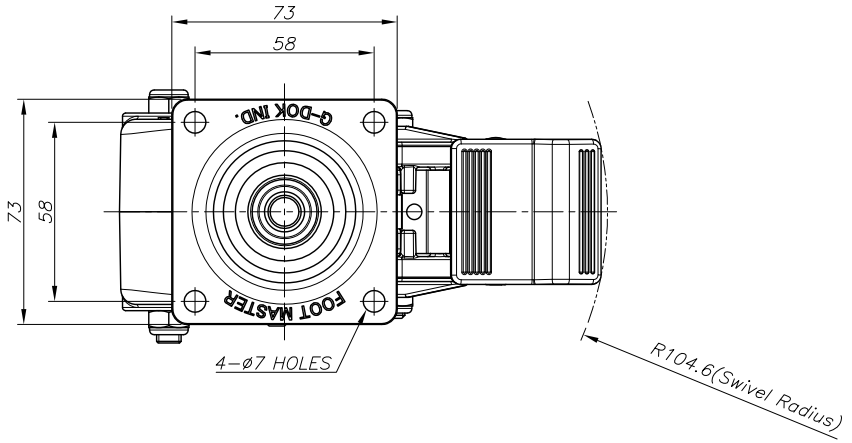

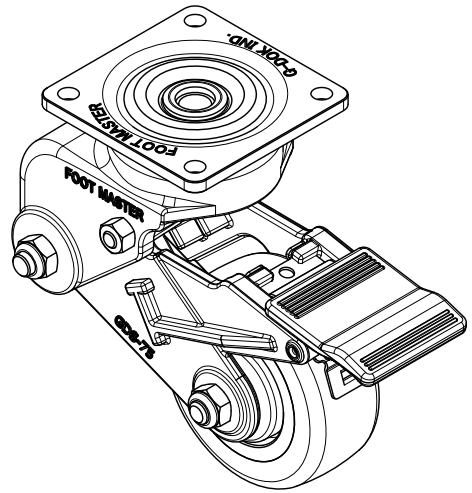

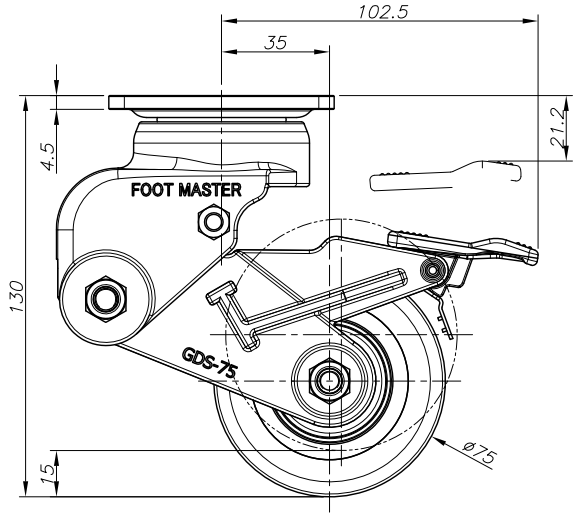

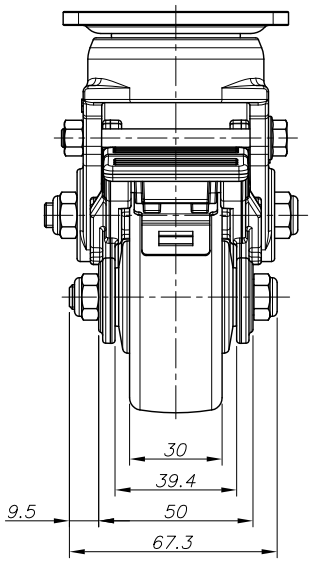

NOTE

No1) Load Capacity : 90kg/EA

No2) Surface Treatment : Powder Coated & Zinc Galvanized & Electroless Nickel Plated

NO.	DESCRIPTION	UNIT	Q'TY	MATERIAL	WEIGHT	SPECIFICATION	REMARKS
-	-	-	-	-	-	-	-

PROCESS	--
MATERIAL	--

APPROVED BY	CHECKED BY	DRAWN BY
O.C.K	J.T.H	J.L.M

PRODUCT GENERAL TOLERANCE

CASTER HEIGHT		WHEEL OUTER DIAMETER		WHEEL HUB WIDTH	
PRECISION(P)	GENERAL(G)	PRECISION(P)	GENERAL(G)	PRECISION(P)	GENERAL(G)
±0.5% (MIN:±0.5mm)	±1% (MIN:±1mm)	±0.5% (MIN:±0.5mm)	±1% (MIN:±1mm)	-1% (MIN:-0.5mm)	-2% (MIN:-1mm)

GENERAL TOLERANCE

CHAMFER	0.5	ROUND	0.5	UNIT	mm

MACHINING, WORKING			DIE CASTING(2)			INJECTION MOLDING			PRESS WORKING				
RANGE	PRECISION (1)	GENERAL (2)	RANGE	Hole&shaft ø10 or less	Hole&shaft ø10 or more	RANGE	PRECISION (1)	GENERAL (2)	BENDING RANGE	t	t/2	t/3	t/4
0.5 ~ 6	±0.05	±0.1	1~3	±0.5	±0.1	1~3	±0.4	±0.5	1~3	±0.1	±0.2	±0.5	±1
6 ~ 30	±0.1	±0.2	3~6	±0.1	±0.2	3~6	±0.5	±0.1	3~10	±0.15	±0.3	±0.8	±1.5
30 ~ 120	±0.15	±0.3	6~10	±0.3	±0.4	6~10	±0.1	±0.2	10~40	±0.2	±0.5	±1.2	±2.5
120 ~ 400	±0.2	±0.5	10~120	±0.5	±0.7	10~120	±0.15	±0.3	40~400	±0.3	±0.8	±2.0	±4.0
400 ~ 1000	±0.3	±0.8	120~315	±0.7	±0.8	120~315	±0.3	±0.8	400~1000	±0.5	±1.2	±3.0	±6.0

FOOT MASTER®	FOOMA®	G-DOK IND.
SERIES NAME	GDS-SERIES	
PRODUCT NAME	GDS-75-BSF-LUD / GDS-75-BRF-LUD	
PART NAME	ASSEMBLY	

DATE	2026.08.12	GSN NO.	-
SCALE	N/S	DWG. NO.	-
WEIGHT	--	REVISION	0
GENERAL TOLERANCE	B	SIZE	A3
		ANGLE	

FOOT MASTER G-DOK IND. FOOT MASTER G-DOK IND. FOOT MASTER G-DOK IND.

VERSION:20230808