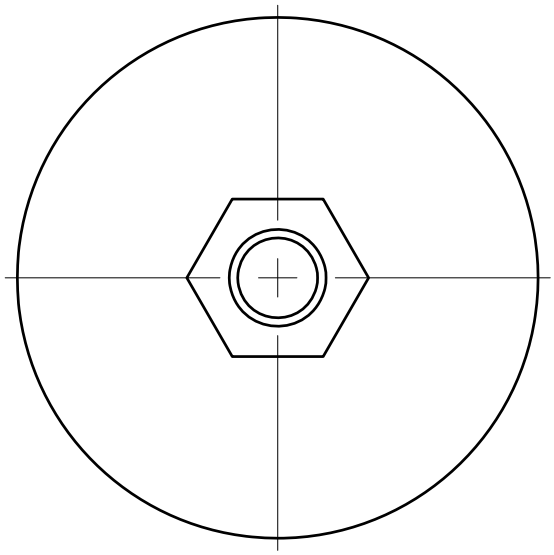

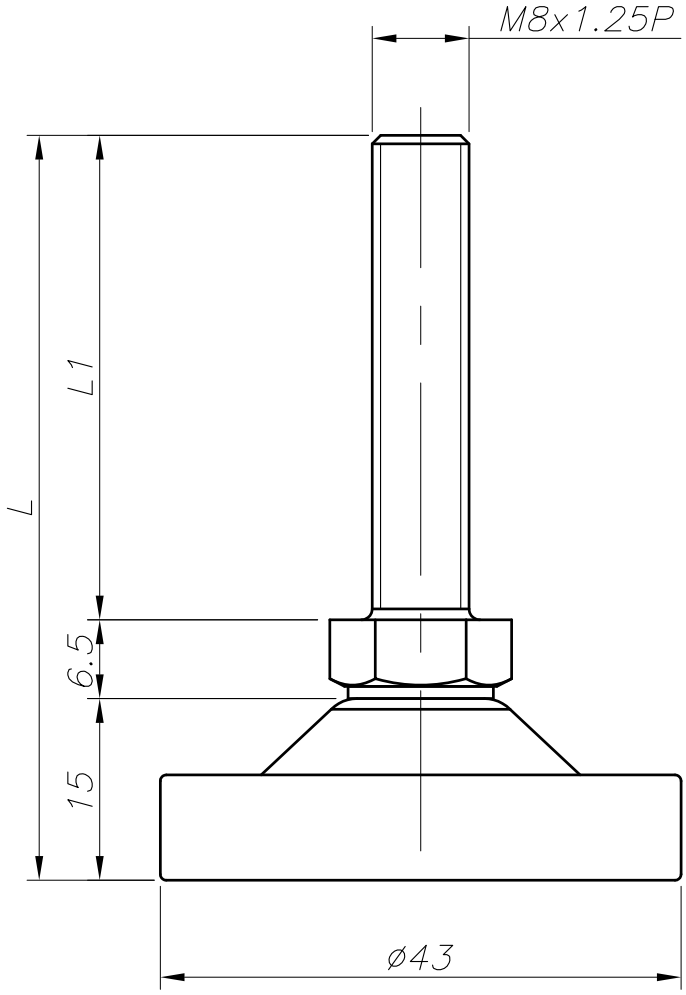

FOOT MASTER ®	FOOMA®	G-DOK IND.	MODEL NAME	PFR-8

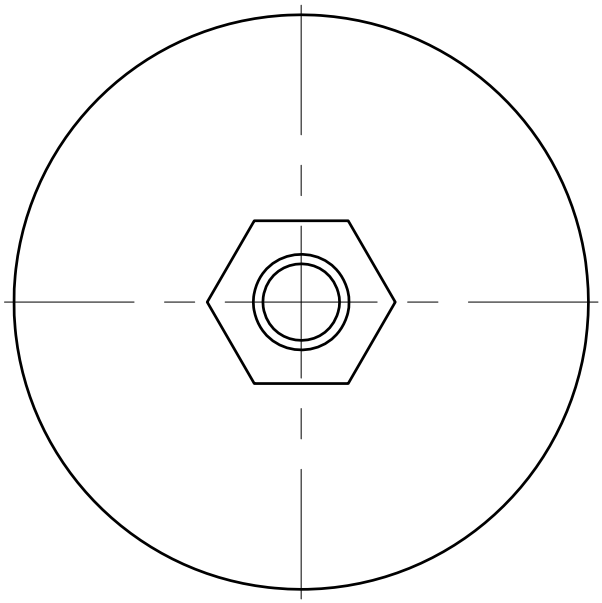

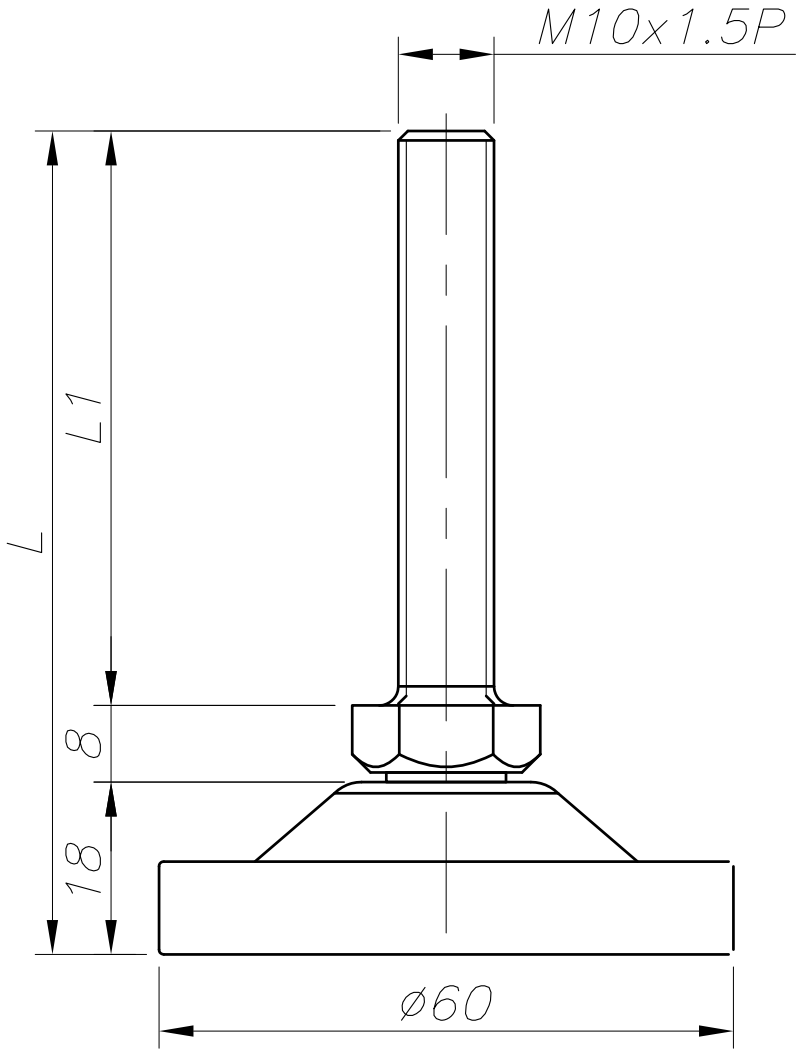

FOOT MASTER ®	FOOMA®	G-DOK IND.	MODEL NAME	PFR-10

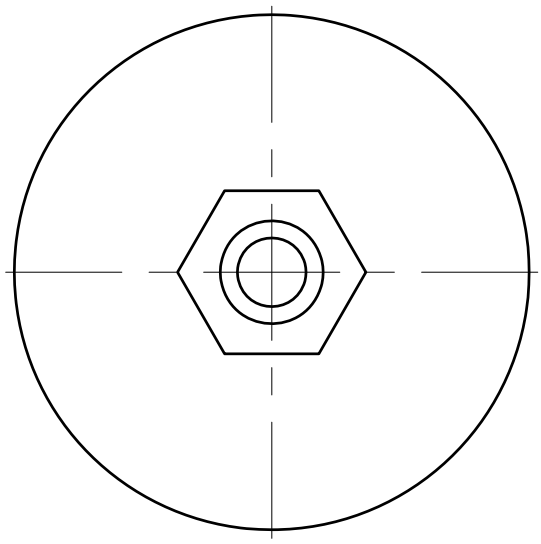

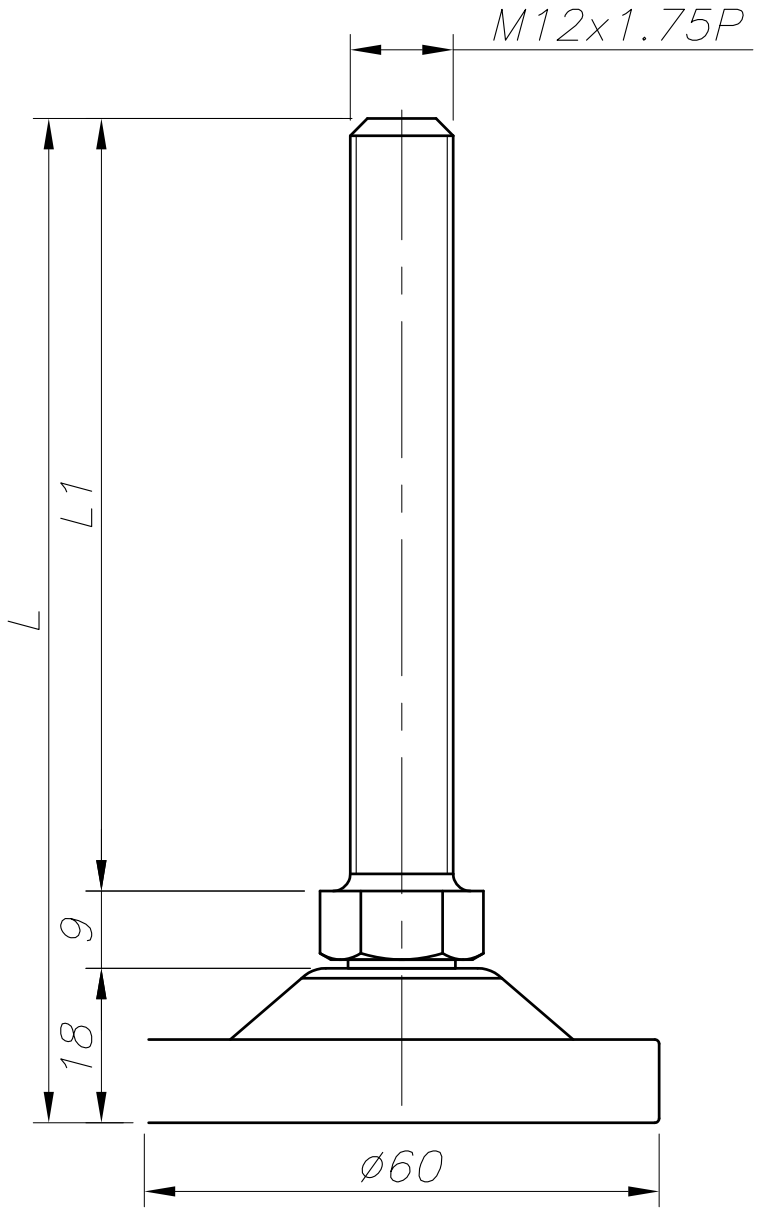

FOOT MASTER ®	FOOMA®	G-DOK IND.	MODEL NAME	PFR-12

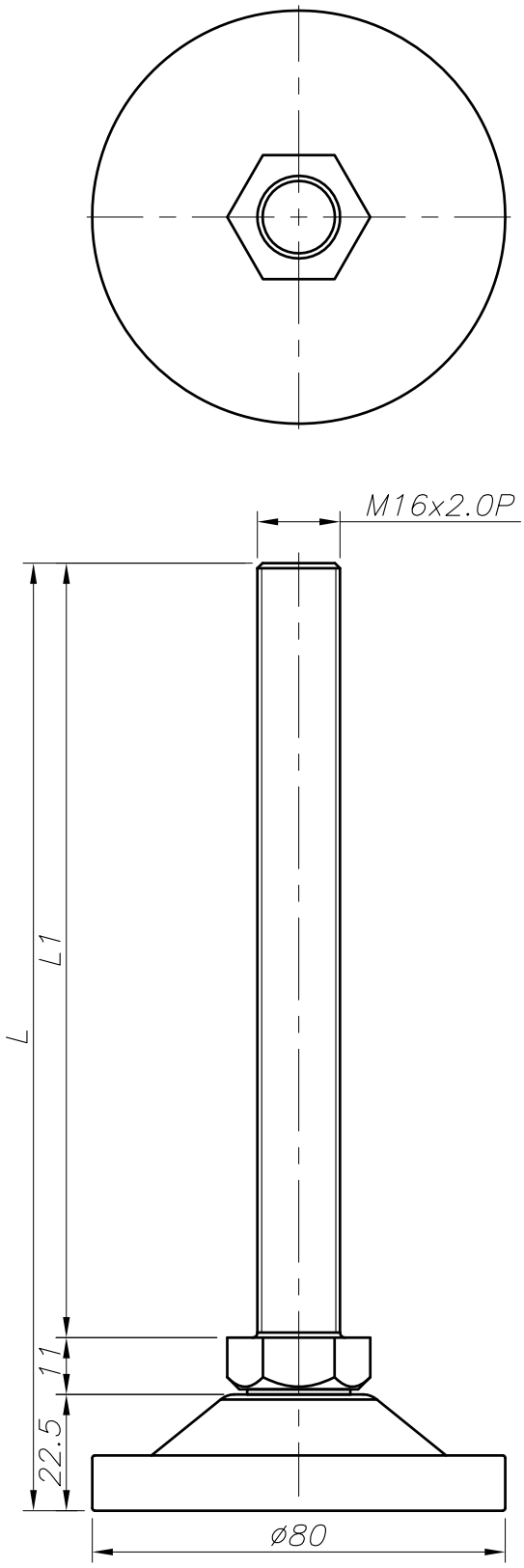

FOOT MASTER ®	FOOMA®	G-DOK IND.	MODEL NAME	PFR-16

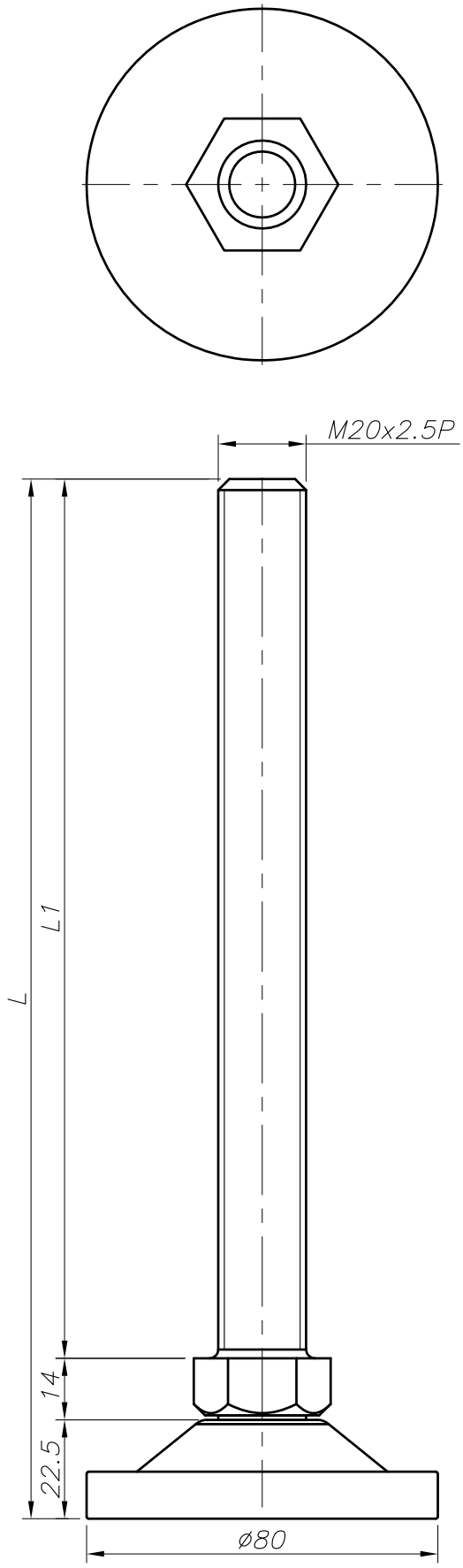

FOOT MASTER ®	FOOMA®	G-DOK IND.	MODEL NAME	PFR-20