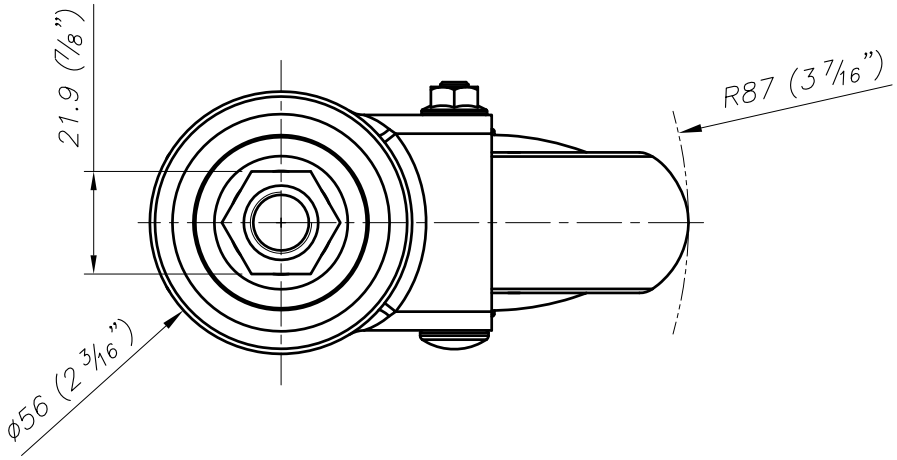

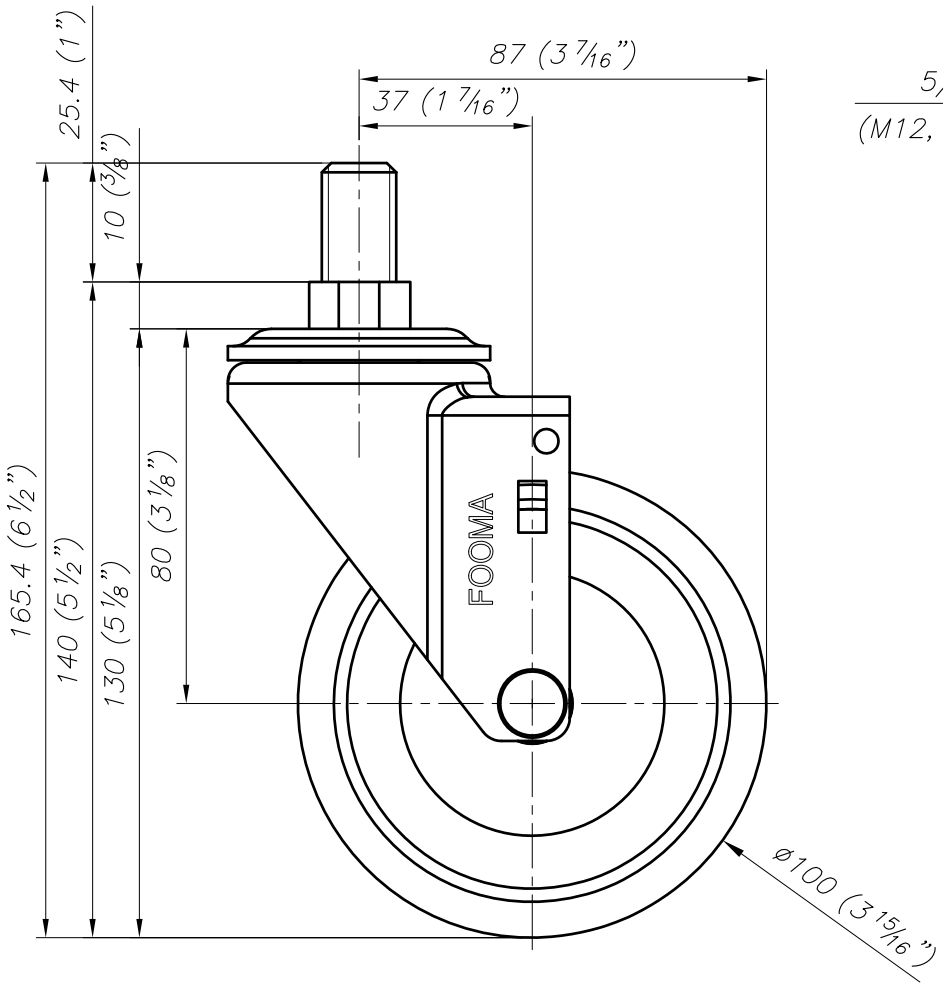

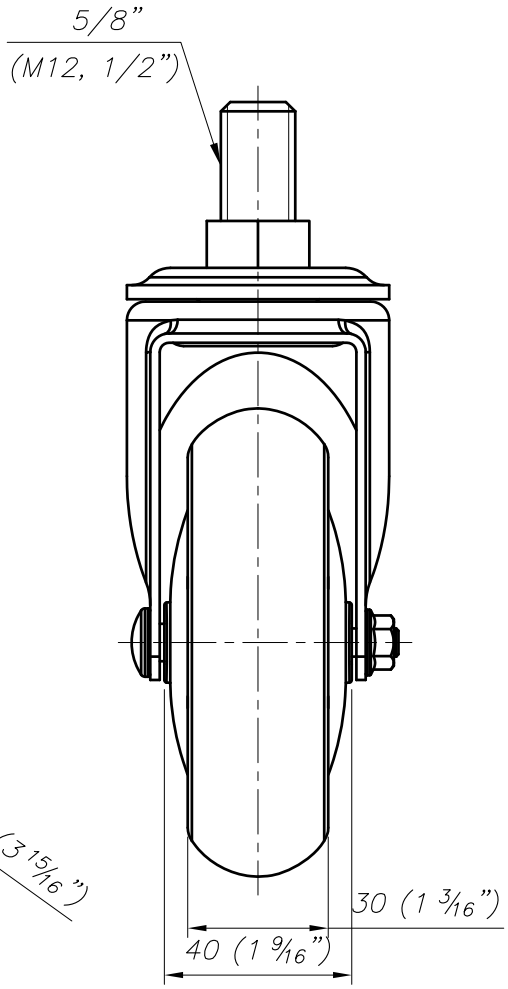

FOOT MASTER ®	FOOMA ®	G–DOK IND.	MODEL NAME	SGL-100-ASS-EUD

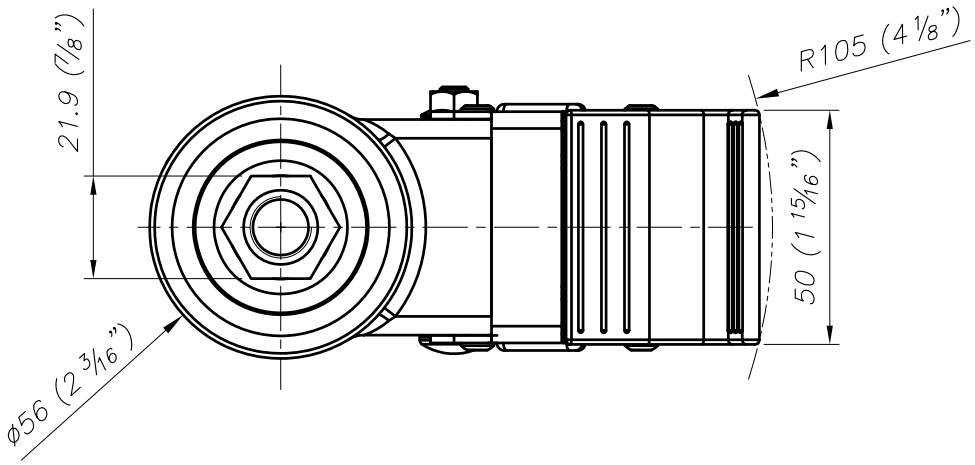

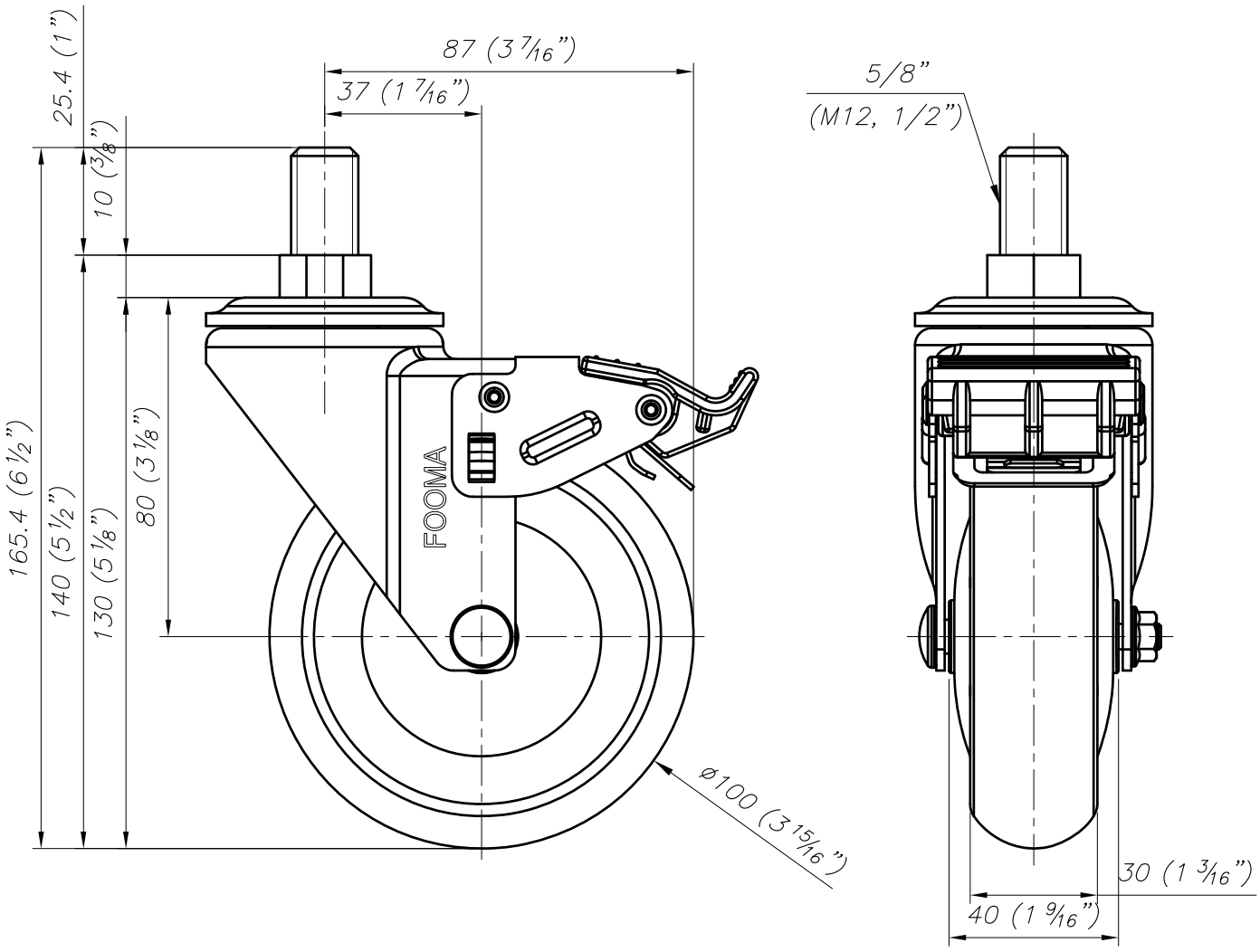

FOOT MASTER ®	FOOMA ®	G-DOK IND.	MODEL NAME	SGL-100-BSS-EUD