REV. NO.	DATE	DESCRIPTION	APP'D	REMARKS
1	–	–	–	–

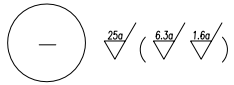

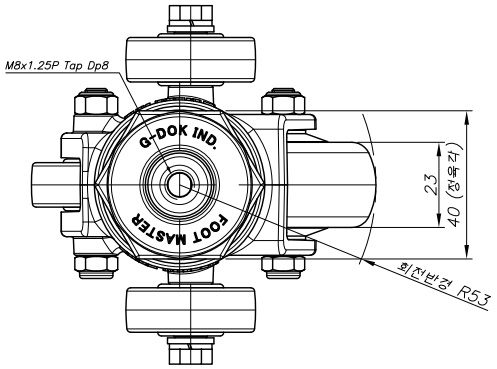

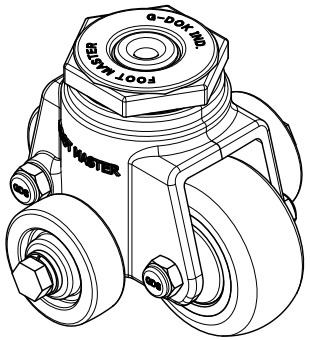

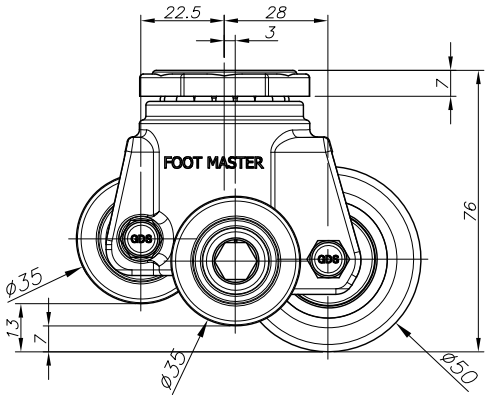

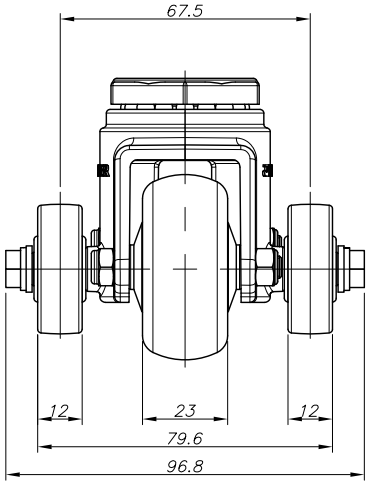

NO.	DESCRIPTION	UNIT	Q'TY	MATERIAL	WEIGHT	SPECIFICATION	REMARKS
--	--	-	-	-	-	-	-

PROCESS	--
MATERIAL	--

APPROVED BY	CHECKED BY	DRAWN BY
O.C.K	J.Y.H	Y.S.W

PRODUCT GENERAL TOLERANCE

CASTER HEIGHT		WHEEL OUTER DIAMETER		WHEEL HUB WIDTH	
PRECISION(I)	GENERAL(II)	PRECISION(I)	GENERAL(II)	PRECISION(I)	GENERAL(II)
±0.5% (MIN:±0.5mm)	±1% (MIN:±1mm)	±0.5% (MIN:±0.5mm)	±1% (MIN:±1mm)	-1% (MIN:-0.5mm)	-2% (MIN:-1mm)

GENERAL TOLERANCE — CHAMFER 0.5 — ROUND 0.5 — UNIT mm

MACHINING, WORKING			DIE CASTING(3)		INJECTION MOLDING			PRESS WORKING				
RANGE	PRECISION (1)	GENERAL (2)	RANGE	Hole/shaft precision	Hole/shaft general	RANGE	PRECISION (1)	GENERAL (2)	RANGE	t	1	2	3
0.5 ~ 6	±0.05	±0.1	1~3	±0.5	±1	1~6	±0.8	±1.5	1~3	±1	±1	±1	±1
6 ~ 30	±0.1	±0.2	3~6	±1	±1	6~30	±1.5	±1	3~10	±1.5	±1	±1	±1.5
30 ~ 120	±0.15	±0.3	6~10	±1.5	±1.5	30~120	±1	±1.5	10~40	±2	±1	±1	±2.5
120 ~ 400	±0.2	±0.5	10~120	±2.5	±2	120~400	±2	±2	40~100	±3	±2	±3	±4
400 ~ 1000	±0.3	±0.8	120~315	±5	±3	315~1000	±5	±3	100~300	±5	±2	±3	±6

FOOT MASTER®	FOOMA®	G-DOK IND.
CUSTOMER	GSTEP-SERIES	
PRODUCT NAME	GSTEP-50-ASS-EUS	
PART NAME	ASSEMBLY	

DATE	2025.12.03	GSN NO.	-
SCALE	1/1.5	DWG. NO.	-
WEIGHT	--	REVISION	0
GENERAL TOLERANCE	B	SIZE	A3
		ANGLE	

FOOT MASTER G-DOK IND.

VERSION:20230808