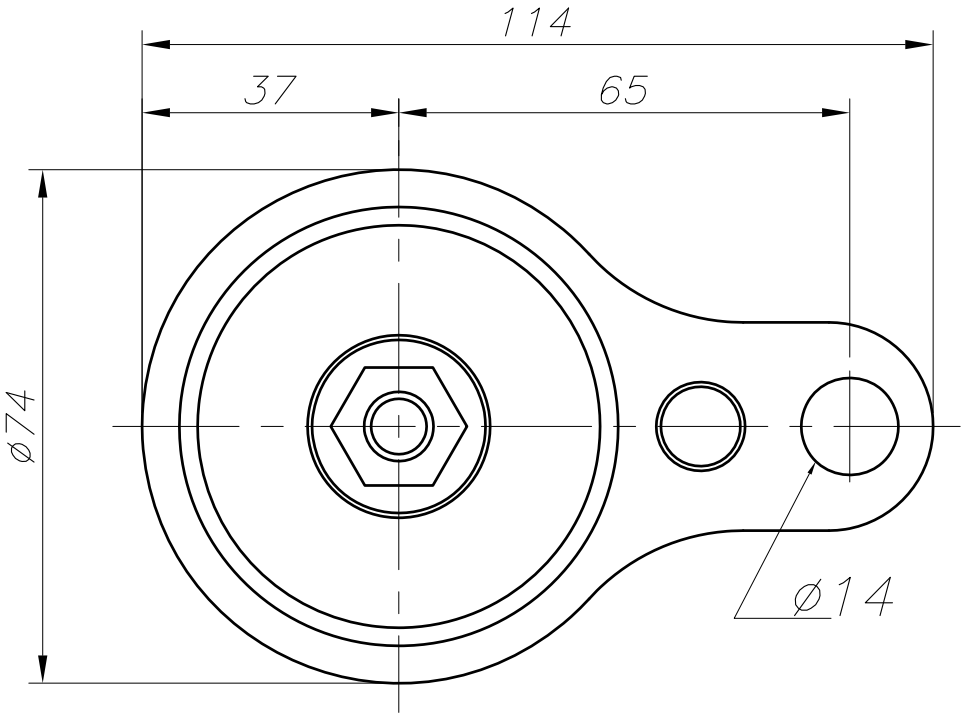

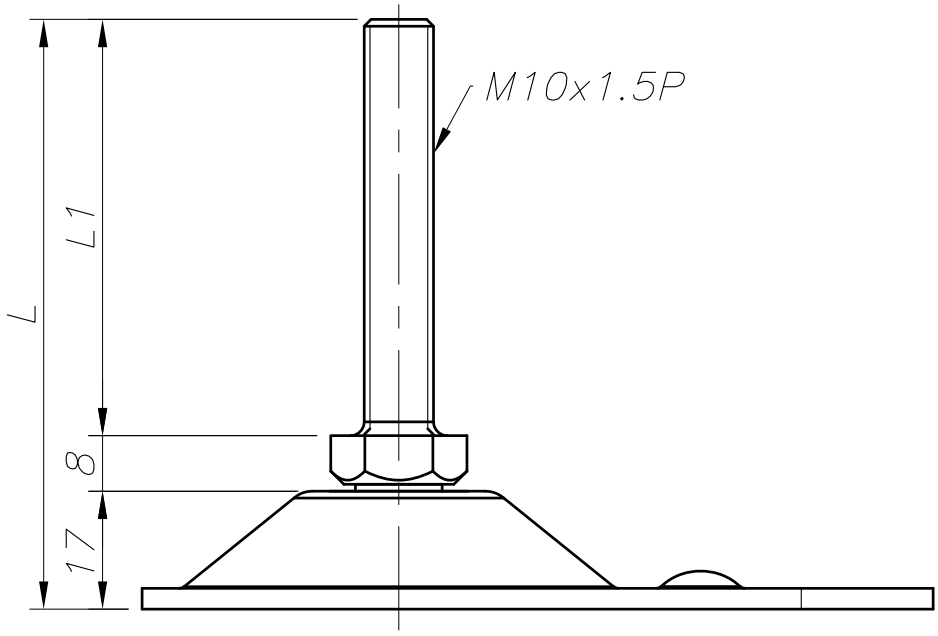

FOOT MASTER®	FOOMA®	G-DOK IND.	MODEL NAME	PFA-10

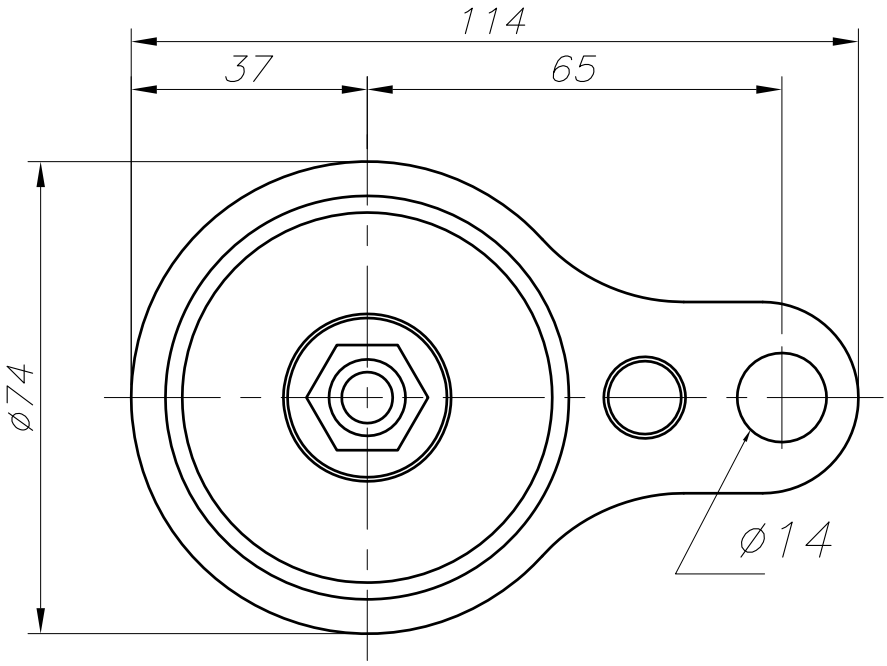

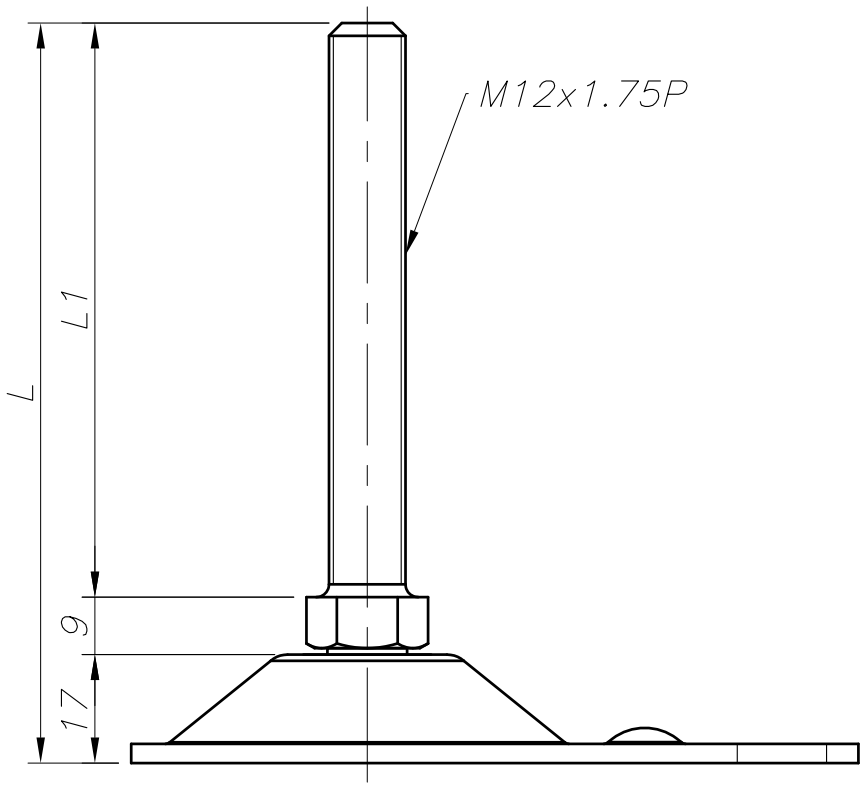

FOOT MASTER®	FOOMA®	G-DOK IND.	MODEL NAME	PFA-12

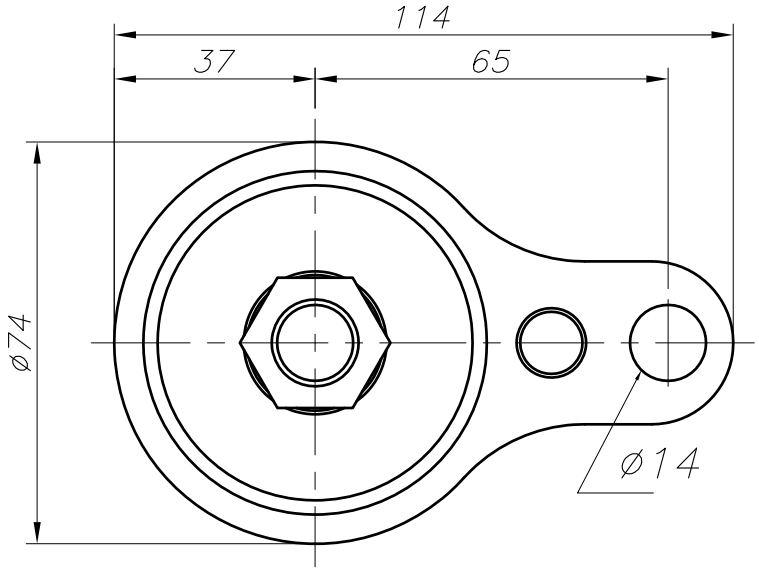

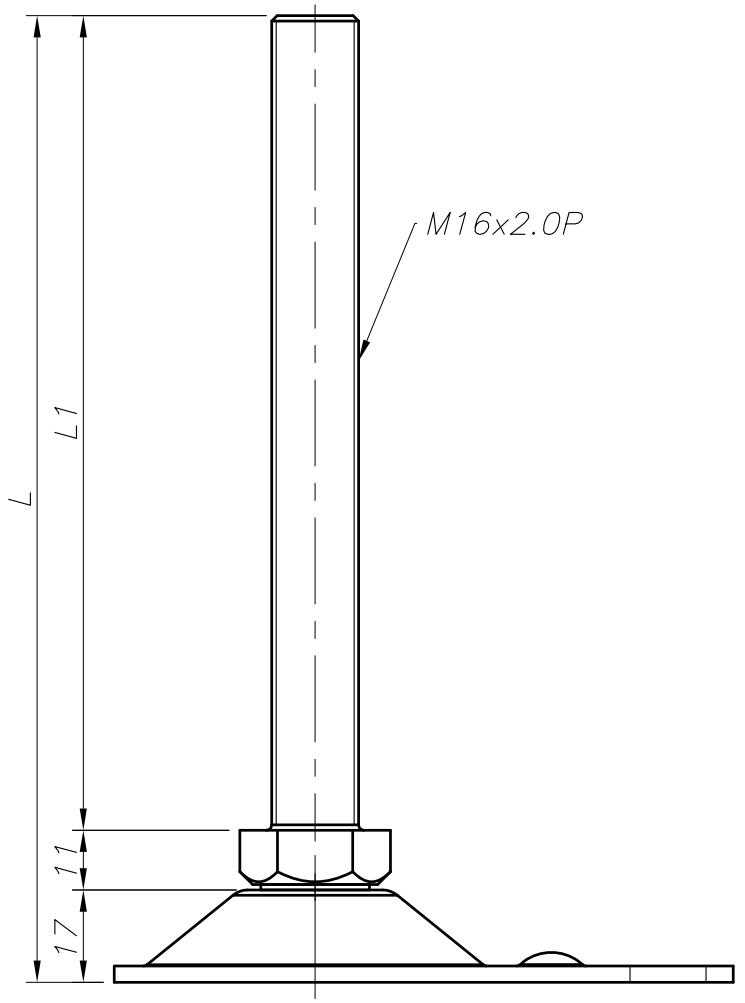

FOOT MASTER ®	FOOMA®	G-DOK IND.	MODEL NAME	PFA-16

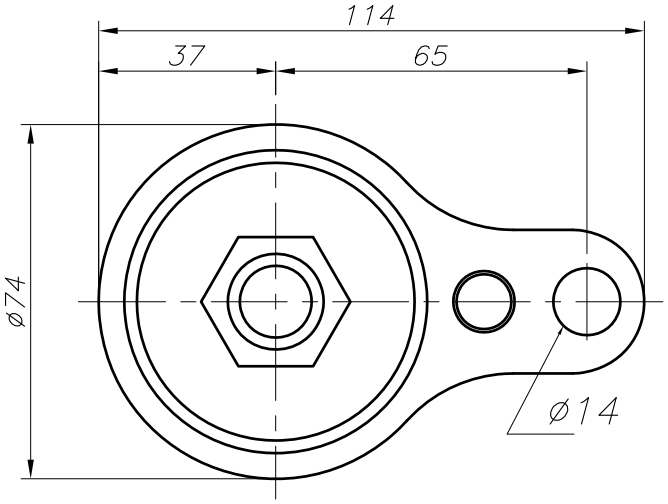

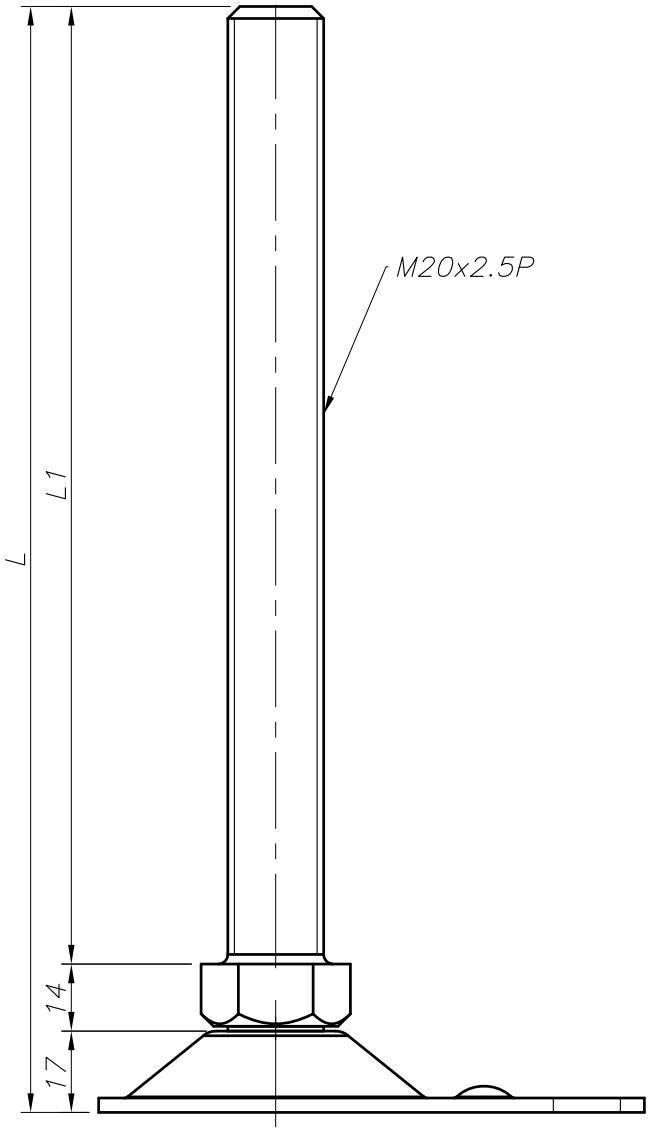

FOOT MASTER ®	FOOMA®	G-DOK IND.	MODEL NAME	PFA-20